# Anti-nudge hoop 1150 × 750 mm



## TECHNICAL SPECIFICATIONS

| | |
|---|---|
| **Height above ground (A)** | 1150 mm |
| **Overall width (B)** | 750 mm |
| **Tube diameter (Ø)** | 76 mm |
| **Base plate length** | 180 mm |
| **Base plate width** | 160 mm |
| **Material** | Steel |
| **Steel grade** | S235 JR |
| **Finish** | Hot-dip galvanised |
| **Mounting** | Removable |

## DIMENSIONS

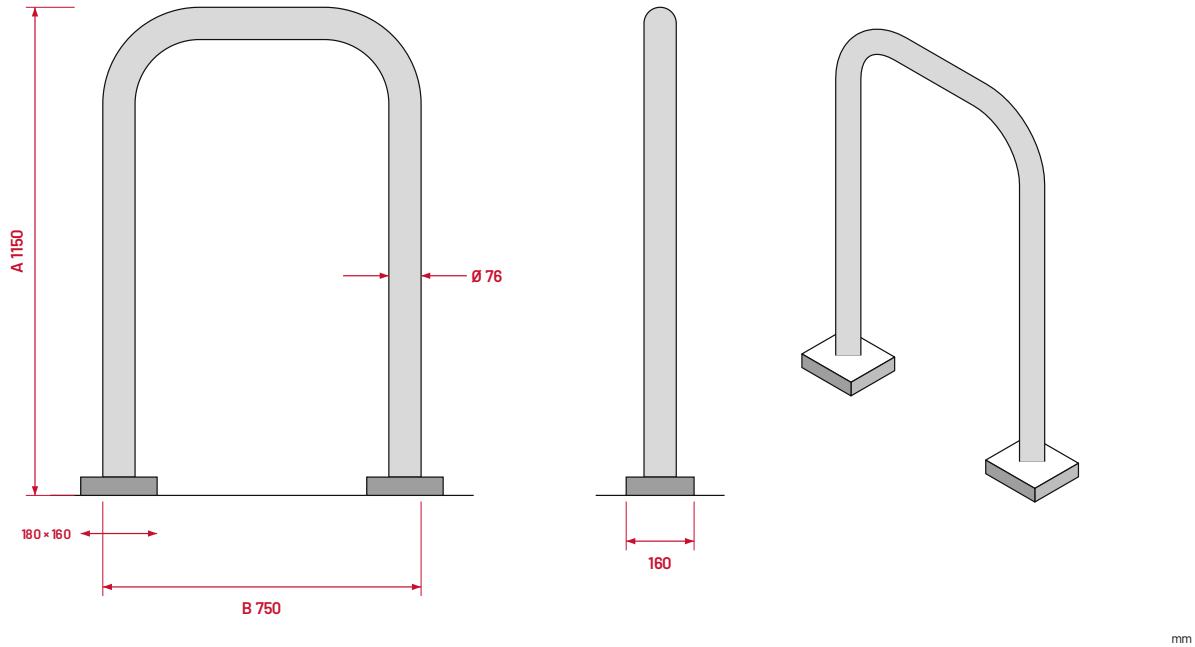


**A** Height above ground **B** Overall width **Ø** Tube diameter

All dimensions in mm

## AVAILABLE VERSIONS

| Item no. | Width | Height | Mounting | Weight |
|---|---|---|---|---|
| **477_08APBG** | 750 mm | 1150 mm | Removable (fixed by plugs) | 15 kg |