Anti-nudge hoop 650 × 400 mm



TECHNICAL SPECIFICATIONS

Height above ground (A)	650 mm
Overall width (B)	400 mm
Tube diameter (Ø)	76 mm
Base plate length	180 mm
Base plate width	160 mm
Material	Steel
Steel grade	S235 JR
Finish	Hot-dip galvanised
Mounting	Fixed by plugs

DIMENSIONS

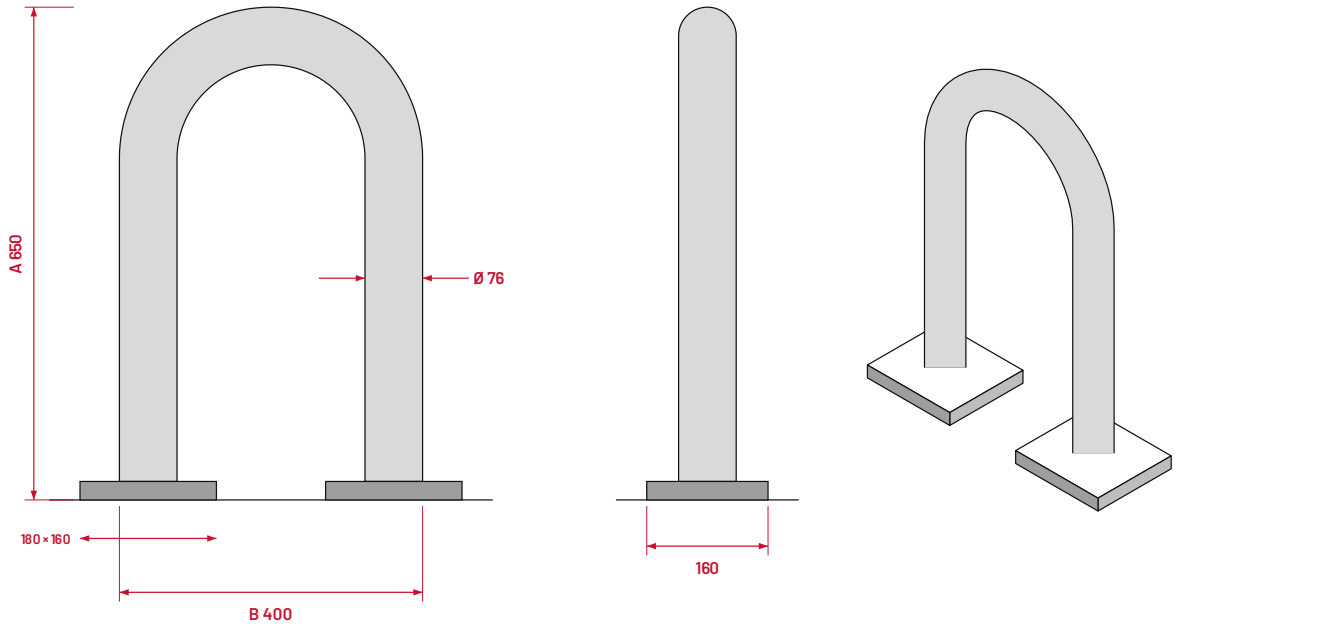

A Height above ground **B** Overall width **Ø** Tube diameter

All dimensions in mm

AVAILABLE VERSIONS

Item no.	Width	Height	Mounting	Weight
477_04APBG	400 mm	650 mm	Removable (fixed by plugs)	11.53 kg